TECHNICAL SPECIFICATION - VRF CITY MULTI RANGE

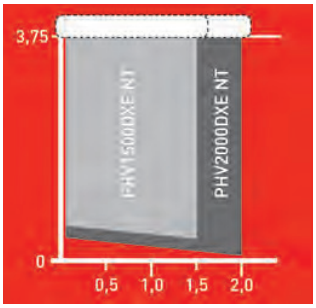

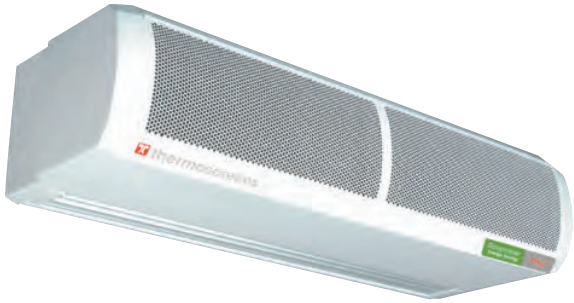

VRF City Multi PHV DXE Heat Pump Range - Surface Mounted

Model	Dimensions (mm) (l X d X h)	Electrical Supply (50Hz)**	Max. Output (kW)+	Loading (A) *per phase	Max. Velocity (m/s)	Max. Air Volume (m^3/h)	Weight (kg)	Max. dB(A) @3m	Max. Mounting Height (m)
VRF PHV1000 DXE HO	1196 x 377 x 255	400V~3P+N+E	9.0	7.8 (1.3)	9.0	1400	39	56	3.75
VRF PHV1500 DXE LO	1746 x 377 x 255	400V~3P+N+E	10.6	12.7 (1.8)	9.0	2500	59	58	3.75
VRF PHV1500 DXE HO	1746 x 377 x 255	400V~3P+N+E	15.1	12.7 (1.8)	9.0	2600	60	58	3.75
VRF PHV2000 DXE LO	2296 x 377 x 255	400V~3P+N+E	16.4	15.7 (2.7)	9.5	3300	78	59	3.75
VRF PHV2000 DXE HO	2296 x 377 x 255	400V~3P+N+E	21.4	15.7 (2.7)	9.0	3130	80	59	3.75

For use with Mitsubishi Electric R410A City Multi systems. *DX Max. Output at 7/6ºC oudoor condition. 20ºC indoor temp. *(Amps) if defrost heaters are disabled during commissioning - **electrical supply could then be 230V~1P+N+E. Standard City Multi Air Curtains can also cool if set up during installation and commissioning.

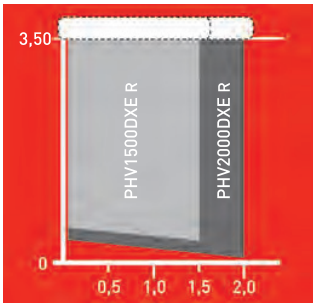

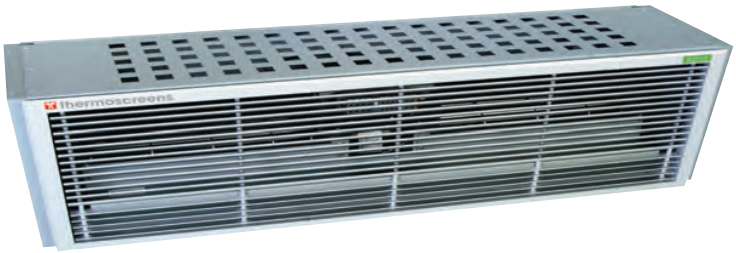

VRF City Multi PHV DXE Heat Pump Range - Recessed

Model	Dimensions (mm) (l X d X h)	Electrical Supply (50Hz)**	Heat Output (kW)+	Loading (A) *per phase	Max. Velocity (m/s)	Max. Air Volume (m^3/h)	Weight (kg)	Max. dB(A) @3m	Max. Mounting Height (m)
VRF PHV1000R DXE HO	1150 x 436 x 296	400V~3P+N+E	9.0	7.8 (1.3)	9.0	1400	45	56	3.50
VRF PHV1500R DXE LO	1650 x 436 x 296	400V~3P+N+E	10.6	12.7 (1.8)	9.0	2500	66	58	3.50
VRF PHV1500R DXE HO	1650 x 436 x 296	400V~3P+N+E	15.1	12.7 (1.8)	9.0	2600	67	58	3.50
VRF PHV2000R DXE LO	2240 x 436 x 296	400V~3P+N+E	16.4	15.7 (2.7)	9.5	3300	85	59	3.50
VRF PHV2000R DXE HO	2240 x 436 x 296	400V~3P+N+E	21.4	15.7 (2.7)	9.0	3130	88	59	3.50

For use with Mitsubishi Electric R410A City Multi systems. *DX Max. Output at 7/6ºC oudoor condition. 20ºC indoor temp. *(Amps) if defrost heaters are disabled during commissioning - **electrical supply could then be 230V~1P+N+E. Standard City Multi Air Curtains can also cool if set up during installation and commissioning.

GA DRAWINGS VRF CITY MULTI RANGE

VRF City Multi Surface Mounted

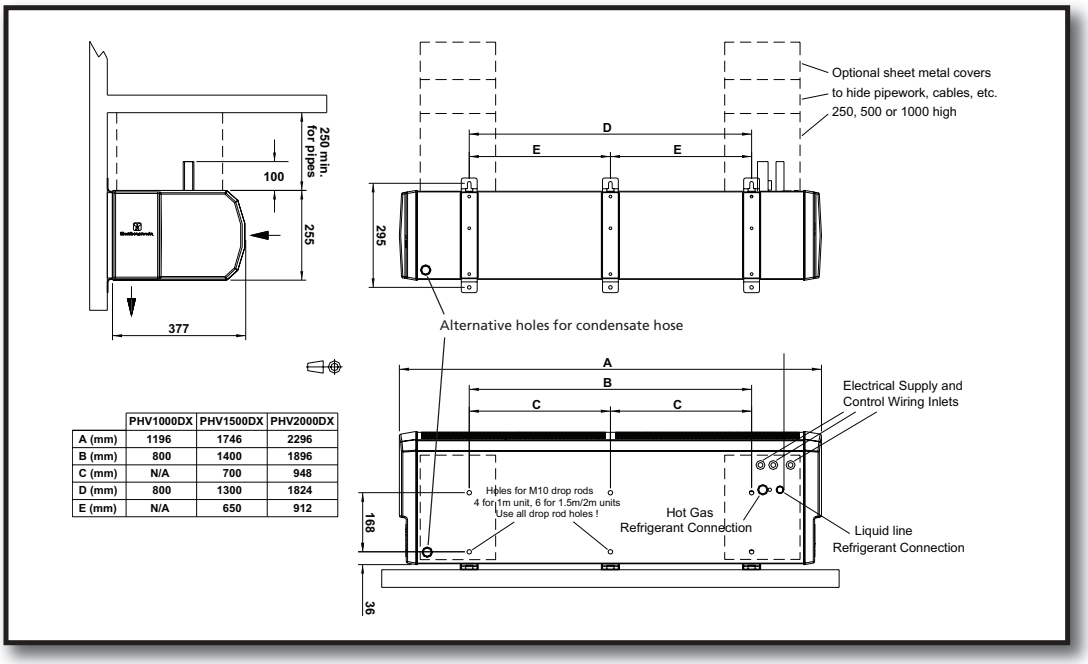

	PHV1000DX	PHV1500DX	PHV2000DX
A (mm)	1196	1746	2296
B (mm)	800	1400	1896
C (mm)	N/A	700	948
D (mm)	800	1300	1824
E (mm)	N/A	650	912

VRF City Multi Recessed Range

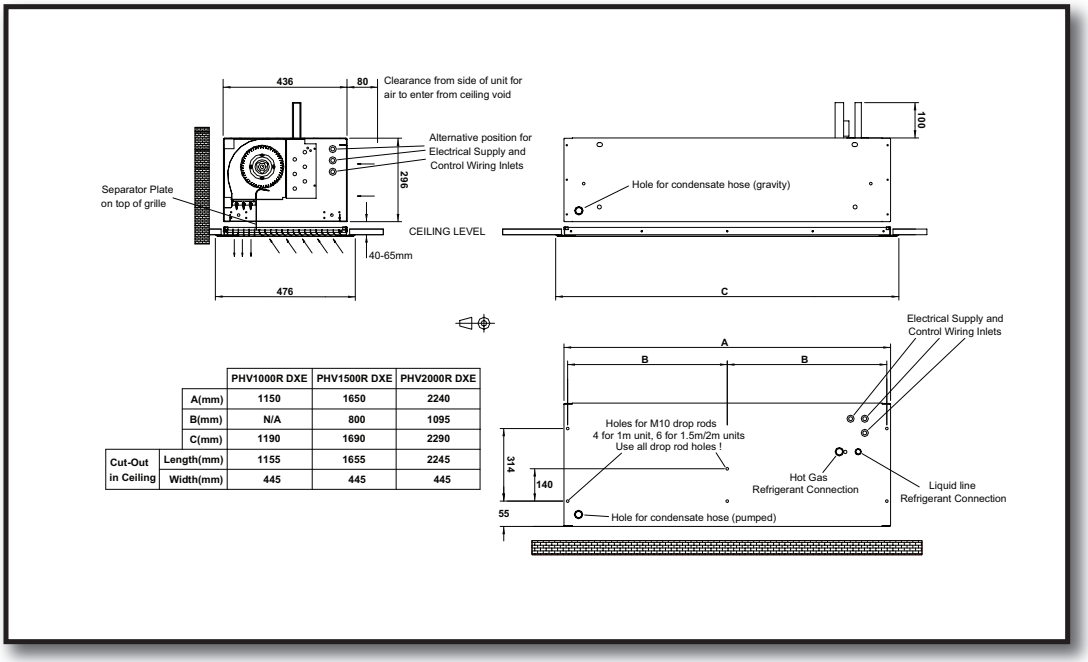

		PHV1000R DXE	PHV1500R DXE	PHV2000R DXE
	A(mm)	1150	1650	2240
	B(mm)	N/A	800	1095
	C(mm)	1190	1690	2290
Cut-Out in Ceiling	Length(mm)	1155	1655	2245
	Width(mm)	445	445	445

OUTDOOR UNIT SELECTION

The Mitsubishi Electric Outdoor unit is selected to match its refrigerant heat output to the size of the Air Curtain. See tables below for size of the outdoor units to be used with technical data for the Air Curtain.

Mr. Slim Surface Mounted and Recessed Units

Air Curtain	Mr Slim Outdoor Unit	Discharge Line (Gas)	Liquid Line	Maximum Pipe Run Length (m)	Maximum Pipe Run Height (m)
PHV1000 DXE HO	PUHZ-RP71VHA4	5/8 in.	3/8 in.	50	30
PHV1500 DXE LO	PUHZ-RP71VHA4	5/8 in.	3/8 in.	50	30
PHV1500 DXE HO	PUHZ-RP140VKA/YKA	5/8 in.	3/8 in.	50	30
PHV2000 DXE LO	PUHZ-RP100VKA/YKA	5/8 in.	3/8 in.	50	30
PHV2000 DXE HO	PUHZ-RP200YKA	1 1/8 in.	3/8 in.	100	30

Indoor Air Temperature = 20°C
Performance figures derived from independent testing by UK test houses BRE and BSRIA in accordance with test standard EN 14511.
The air curtain normally operates under automatic temperature control and can also run at part load.

City Multi Surface Mounted and Recessed Units

Air Curtain	City Multi Outdoor Unit	PAC AH MG Controller	LEV(s) No. Off	Discharge Line (Gas)	Liquid Line	Index Size
VRF PHV1000 DXE HO	PUMY/PUHY/PURY/PQHY/PQRY	PAC-AH125 M-G	Type P632411X01 1 off	5/8 in.	3/8 in.	p100
VRF PHV1500 DXE LO	PUMY/PUHY/PURY/PQHY/PQRY	PAC-AH125 M-G	Type P632411X01 1off	5/8 in.	3/8 in.	p125
VRF PHV1500 DXE HO	PUMY/PUHY/PURY/PQHY/PQRY	PAC-AH140M-G	Type P632414X01 1 off	5/8 in.	3/8 in.	p140
VRF PHV2000 DXE LO	PUMY/PUHY/PURY/PQHY/PQRY	PAC-AH140M-G	Type P632414X01 1 off	5/8 in.	3/8 in.	p140
VRF PHV2000 DXE HO	PUHY/PURY/PQHY/PQRY	PAC-AH250M-G	Type P632411X01 2 off	3/4 in.	3/8 in.	p200

Maximum heat pump output refers to the heating or cooling output from the air curtain air stream. Figures are derived from laboratory testing with reference to test standard EN14511. They are with the air curtain operating at high fan speed, outdoor air temperature 7/6°C db/wb indoor air temperature 20°C db for heating; outdoor air temperature 35/27°C db/wb indoor air temperature 27°C db for cooling. Contact Mitsubishi Electric for performance at other outdoor and indoor conditions. The air curtain normally operates under automatic temperature control set on the PAR-21MAA remote controller and can run at part load.

ACCESSORIES

Standard Equipment Supplied With All Units

All heat pump air curtains are supplied with the following:

- **Wall Brackets and Fixing Bolts**
- **End Caps**
- **Dirty Filter Indicator**

Thermoscreens Dirty filter indicator.

Air curtains are fitted with a dirty filter indicator. It is located at the left-hand end of the outlet grille and signals when the air curtain inlet grille/filters should be vacuum cleaned or the air curtain requires servicing.

Controllers

Mr. Slim Air Curtains

Mr. Slim air curtain is provided with the above manual controller. BMS control can also be used.

City Multi Air Curtains

Mitsubishi PAR-21 MAA Remote controller is used for manual control

Remote 3 speed fan controller

The Mitsubishi H PAC - AH MG controller is provided with the unit.

Optional Extras

Sheet Metal Covers to hide services

Fan Speed Controller for low speeds